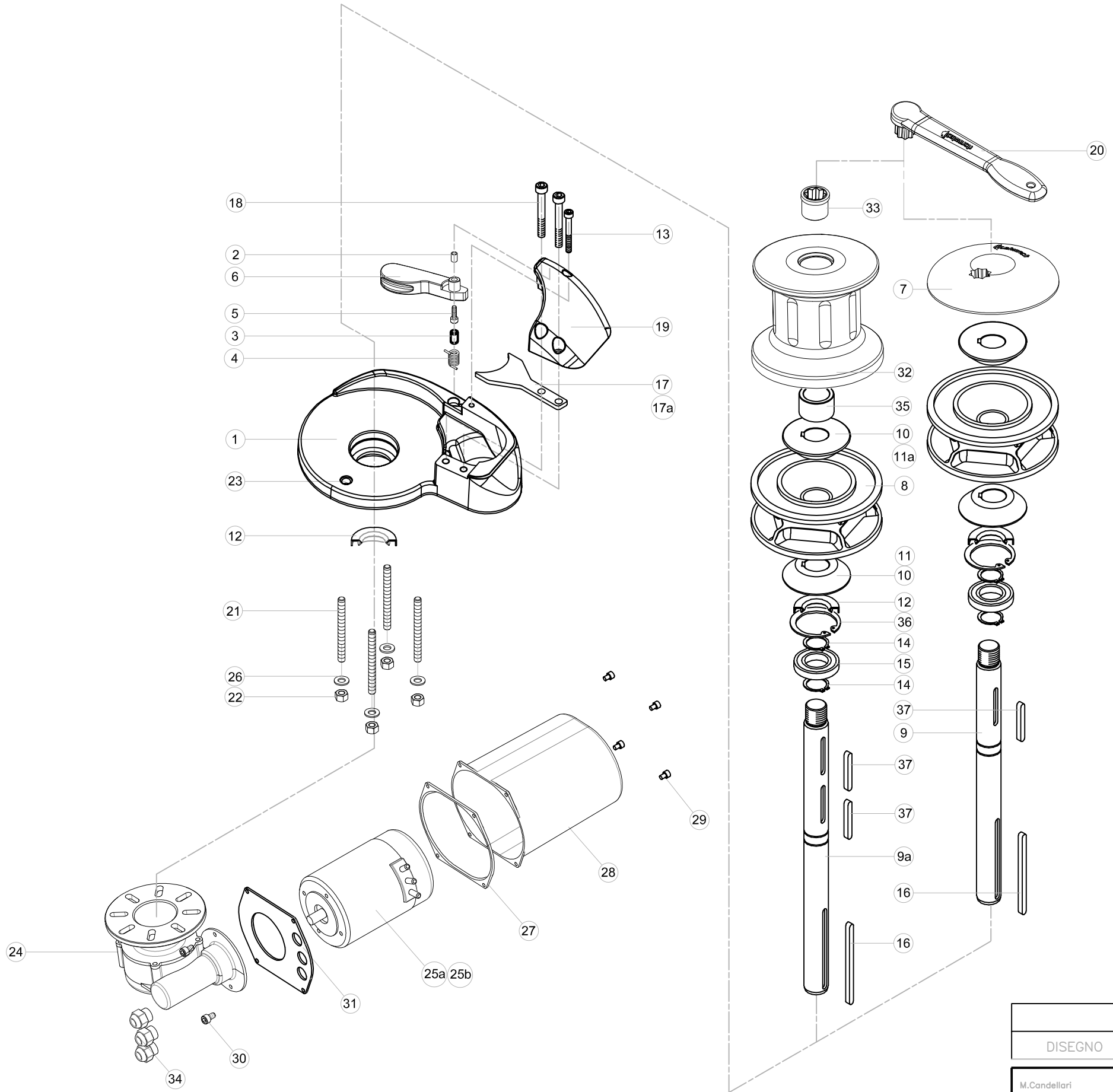

Parts List			
N	CODICE	DESCRIZIONE	Q.TA'
1	BSF_OC_00A	Base	1
2	BZF_OR_00A	Finger bush	1
3	SP_CIL_7X14_INOX	Pivot Ø7x14	1
4	MLF_OR_00A	Finger Spring	1
5	VTTC_M5X20CE	Screw M5x20	1
6	FNF_OC_00A	Finger	1
7	VLF_ST_00B	Gipsy cover	1
8	BRF_ST_00B	Gipsy 10mm p30 - ISO4565	1
8	BRF_ST_00D	Gipsy 8mm p24 - ISO4565/DIN766	1
8	BRF_ST_00C	Gipsy 10mm p28 - DIN766	1
8	BRF_ST_00E	Gipsy 12mm p36 - ISO4564	1
8	BRF_ST_00F	Gipsy 13 DIN766	1
9	ALF_OR_00A/F	Low profile version Shaft	1
9b	ALF_OR_00B	Drum version Shaft	1
10	FRF_FY_00C	Clutches for 8 and 10 mm chains	2
11	FRF_OR_00A	Lower clutch for 12 mm chain	1
11a	FRF_OR_00B	Upper clutch for 12 mm chain	1
12	MIM3055 / 10	Mim 30-55 / 10	2
13	VTTC_M6X14CE	Screw M6x14	1
14	SEEG_30_471_INOX	Seeger Ø30 DIN471	2
15	CUSC.6006/2RS_INOX	Bearing 6006 2RS INOX	1
16	LING.8X7X90	Key 8x7x90	1
17	SCF_OR_00A	Stripper for 12 mm chain	1
17a	SCF_OR_00B	Stripper for 8 and 10 mm chain	1
18	VTTSM8X25CE	Screw M8x25	2
19	CPF_OC_00A	Cover	1
20	LVF_RY_00B	Hadle	1
21	PRIG.M8X80	Stud M8x80	4
22	DADOM8	Nut M8	4
23	SENSORE03	Chaincounter sensor	1
24	SS_RID_OV	Gearbox	1
25a	30785	Electric motor 1500 W 12 V	1
25b	30786	Electric motor 1500 W 24 V	1
26	RNDM8	M8 washer	4
27	GUF_SS_00A	Gasket	1
28	CPF_SS_00A	IP67 Motor cover	1
29	VTTCM5X12CE	Screw	4
30	VTTEM6X18	Screw	2
31	FLF_SS_00A	Motor cover plate	1
32	CMF_OR_00A	Drum	1
33	VLF_ST_00A	Drum nut	1
34	PCN.PG13,5	Fairlead	3
35	BUF_ST_00A	Drum spacer	1
36	SEEG_55_472_INOX	Seeger Ø55 DIN472	1
37	LING.8X7X60	Key 8x7x60	2

DISEGNO	Q.TA'	N.o	DENOMINAZIONE	MATERIALE	FINITURA
	1				

M.Candellari DISEGNATORE	talwinch		SPIGOLI R MAX 0.3
			FOGLIO 1
M.Candellari VERIFICATO	ORCHID 1500 W EXPLODED VIEW		Peso
		TOLL. NON SPECIFICATE ± 0.15	COD.
M.Candellari APPROVATO	SCALA –	DATA 28/11/2019 QUOTE IN mm	DIS. N. E001_OR_1500W

MZ ELECTRONIC SI RISERVA A TERMINI DI LEGGE LA PROPRIETA' DI QUESTO DISEGNO CON DIVIETO DI RIPRODURLO O COMUNQUE DI RENDERLO NOTO A TERZI SENZA AUTORIZZAZIONE

REV.	00	01	02	03	04	05	06
O.M.	CREAZIONE						
DATA	28/11/2019						

Dir Name
File Name E001_OR_1500W